ARPA-E ADEPT Program
15 kV SiC IGBT Modules for Grid Scale Power Conversion

DE-AR0000110

Feb 8, 2010

SiC IGBT TIPS Development

Subhashish Bhattacharya– North Carolina State University

This work is being supported by the U.S. Department of Energy ARPA-E

15 kV SiC IGBT Modules for Grid Scale Power Conversion Program Summary

- **Demonstrate 100 kVA Transformerless Intelligent Power Substation (TIPS) Based Upon 15 kV SiC IGBTs**
  - Design and Simulation of 100 kVA TIPS
  - Develop/Implement TIPS Control
  - Design/Implement HV/HF (High-Voltage, High-Frequency) Transformer
  - Demonstrate 100 kVA SiC IGBT-Based TIPs

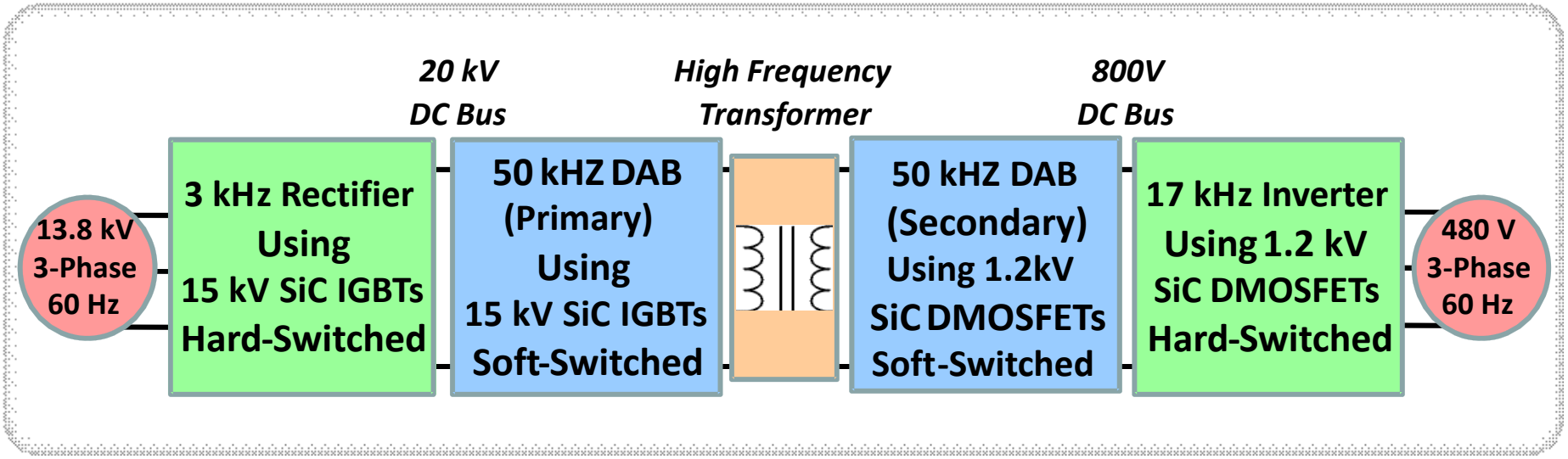

TIPS : Replace 1MVA Transformer

1 MVA Distribution Transformer 480V/12.47kV

Transformer Core Physical Dimensions 1MVA, 15kV:480Y/277V		
Frequency	Mass lb (kg)	Volume f^3 (m^3)
60 Hz	8,160 (3,700)	169 (4.8)
400 Hz	992 (450)	125 (3.54)
1 kHz	790 (358)	101 (2.86)
20 kHz	120 (54.4)	0.5 (0.14)
50 kHz	100 (45.4)	0.5 (0.14)

TIPS Loss 15 kV SiC IGBT

1MVA TIPS system losses – HV rectifier is HS at 3kHz, DAB is 50kHZ SS, each inverter is17kHz HS

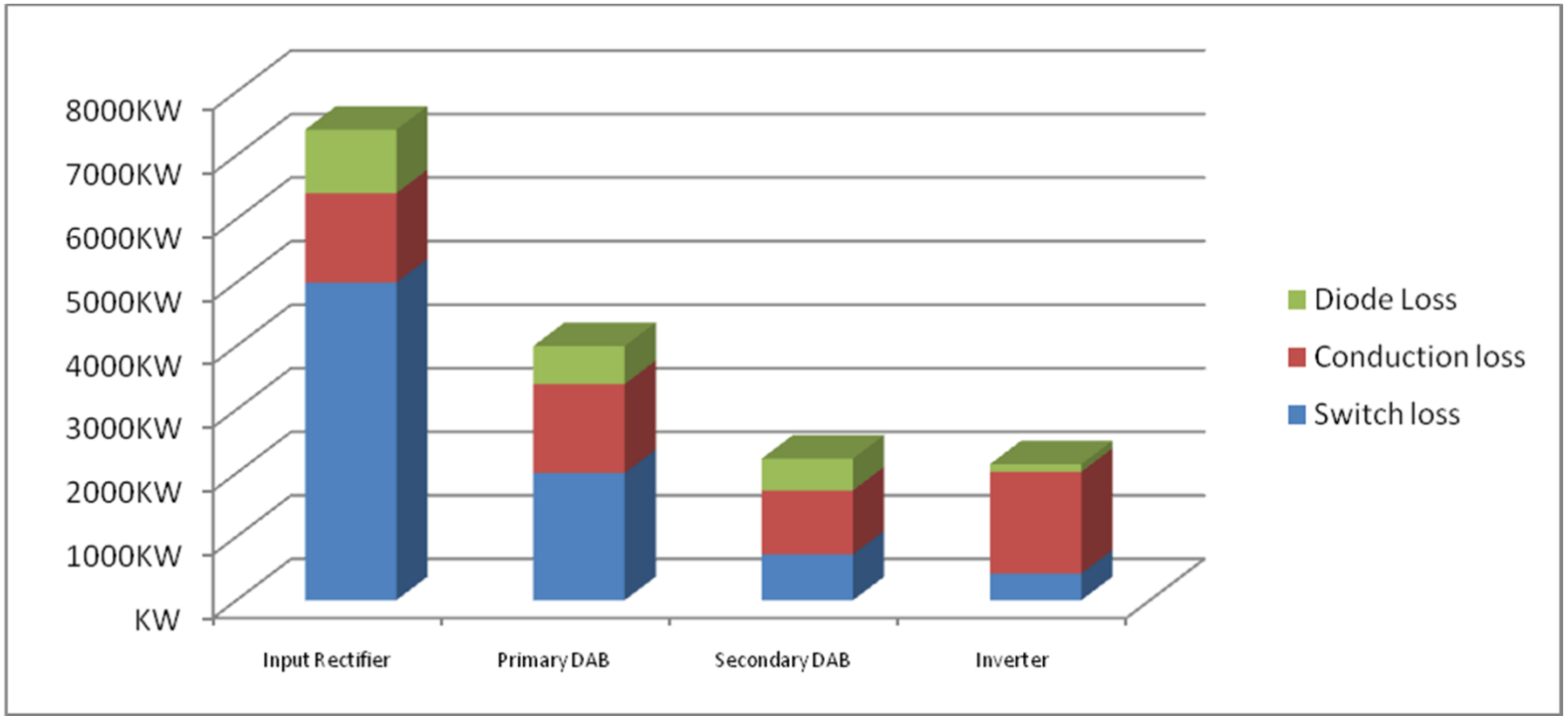

Table 1: Losses of 1MVA TIPS with 15kV SiC IGBTs

1 MVA TIPS	Switch loss	Conduction loss	Diode Loss	Total
Input Rectifier	5000	1404	1000	7404
Primary DAB	2000	1400	600	4000
Secondary DAB	720	1008	500	2228
Inverter	420	1600	120	2140
Total Loss	8140	5412	2220	15772

TIPS Loss 6.5 kV Si-IGBT

1MVA TIPS system losses with Si-IGBTs (6.5kV)– HV rectifier is HS at 1kHz, DAB is 3kHZ SS, each inverter is 5kHz HS

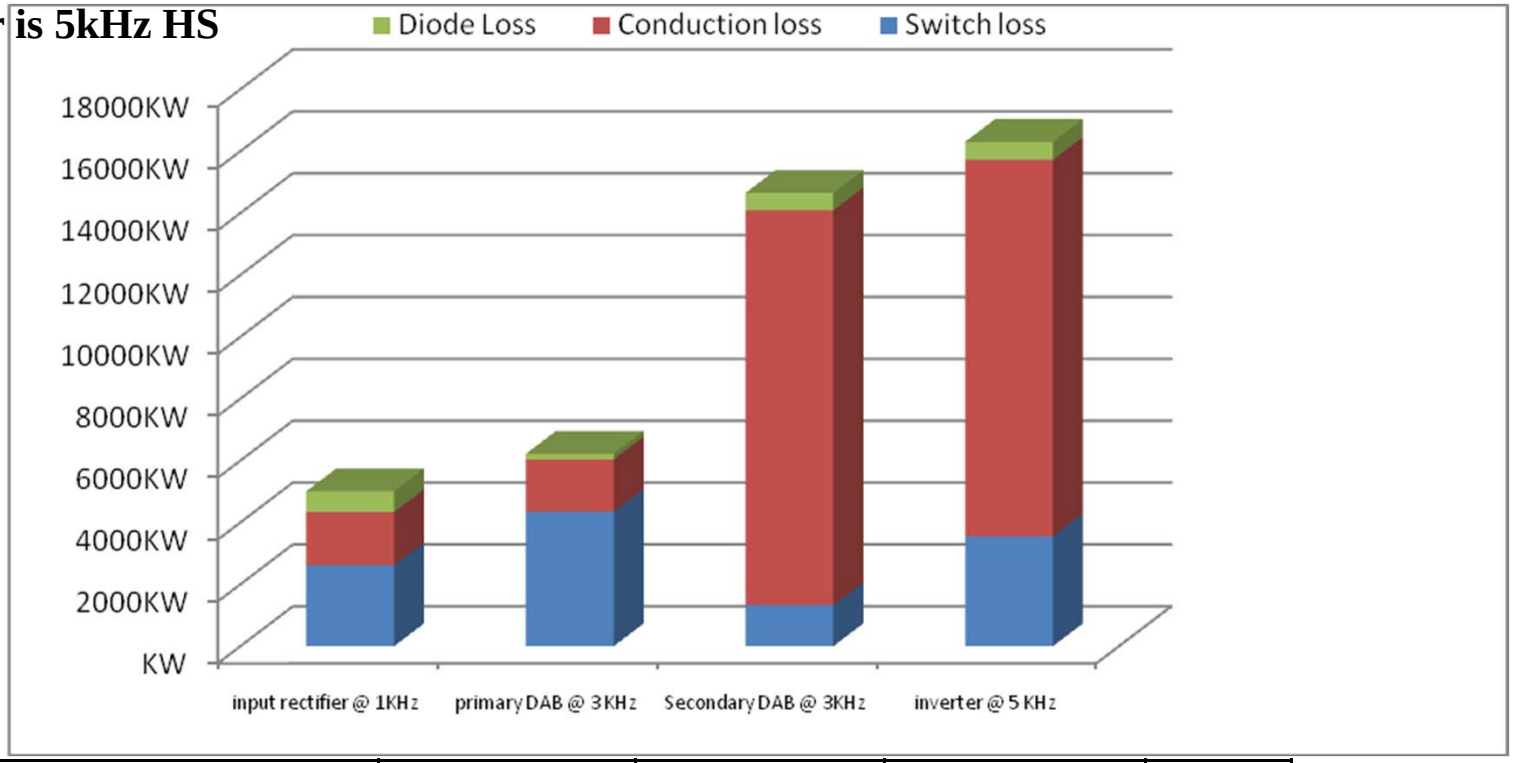

Table 2: Losses of 1MVA TIPS with Si-IGBT (6.5kV)				
	Switch loss	Conduction loss	Diode Loss	**Total**
input rectifier @ 1KHz	2616	1719.36	672	**5007.36**
primary DAB @ 3 KHz	4351.2	1687.2	180	**6218.4**
Secondary DAB @ 3KHz	1320	12768	564	**14652**
inverter @ 5 KHz	3552	12168	583.2	**16303.2**
			Total	**42180.96**

TIPS System Demonstration – NCSU

Solid State Transformer (SST):Gen-I Prototype

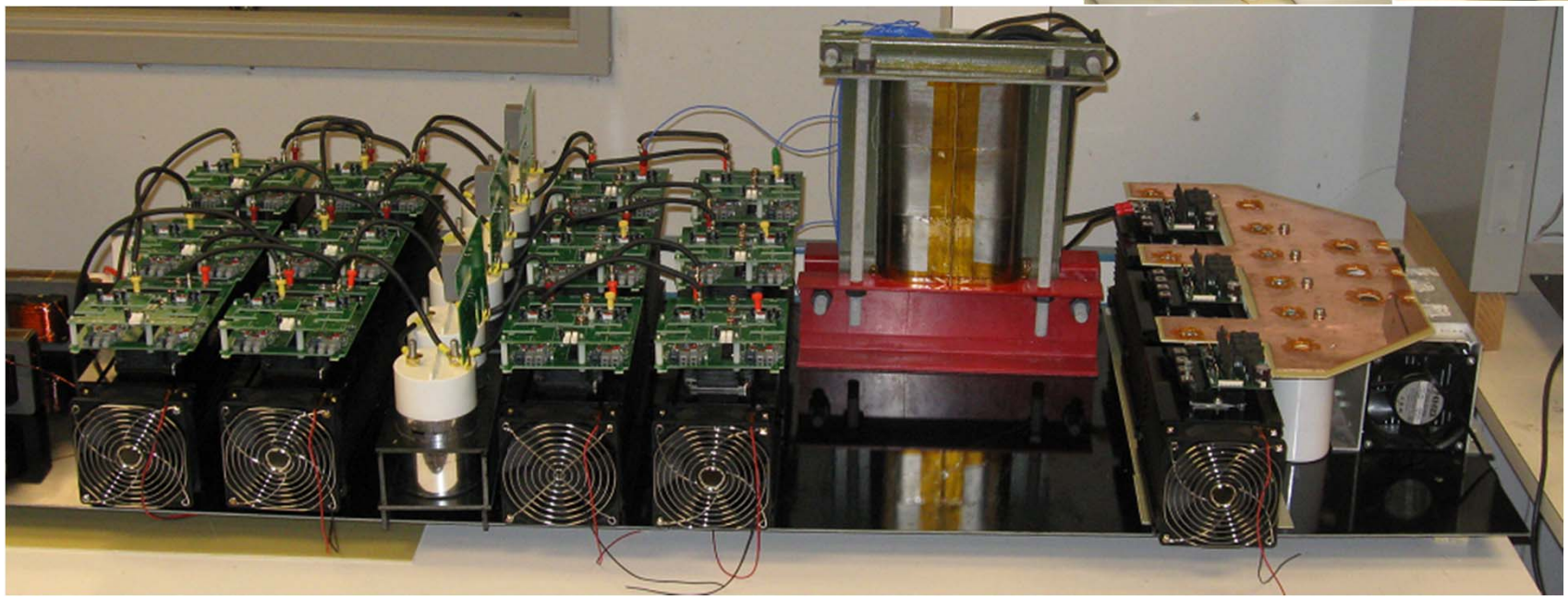

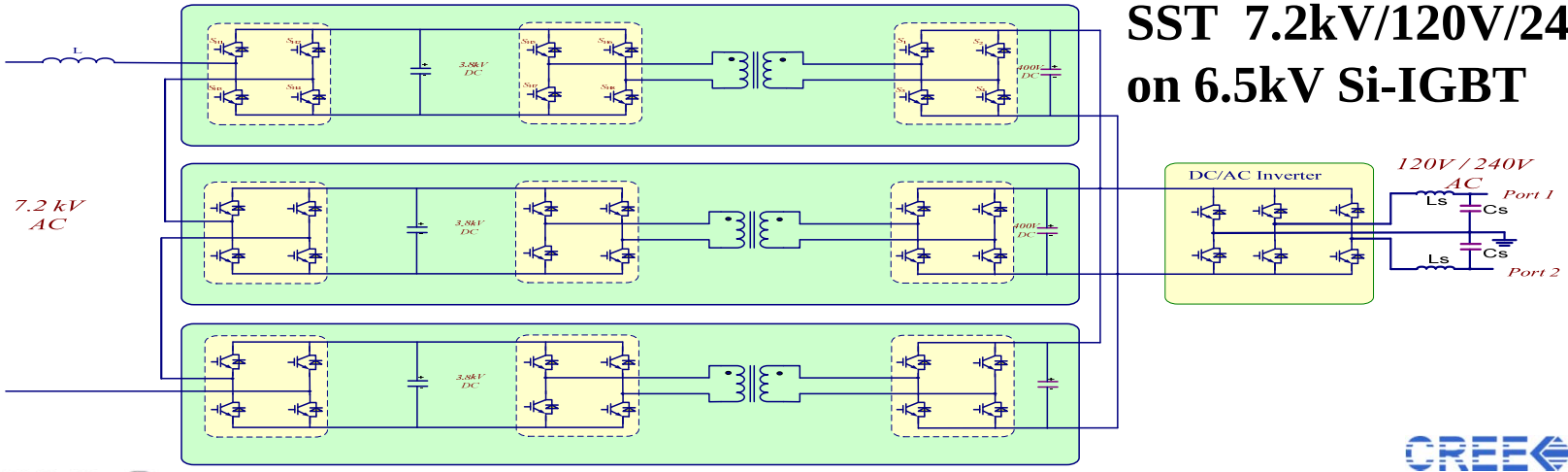

SST 7.2kV/120V/240V based on 6.5kV Si-IGBT

TIPS System Demonstration – NCSU

SST: Gen-I High-Frequency Transformer

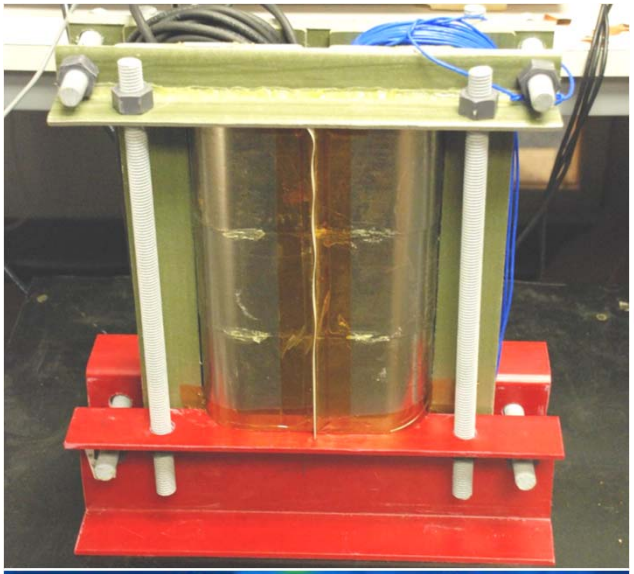

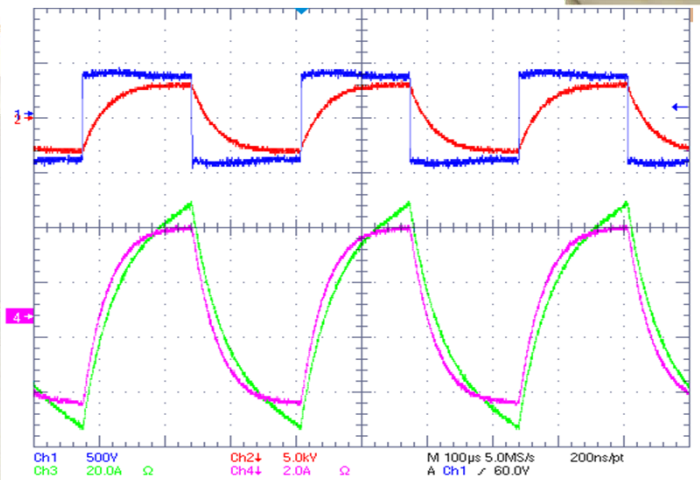

SST 7.2kV/120V/240V HV/HF Transformer 7kVA, 3.8kV/400V@3kHz

Ch1=Vac_low side;
Ch2=Vac_high side;
Ch3= Iac_low side;
Ch4=Iac_High side,

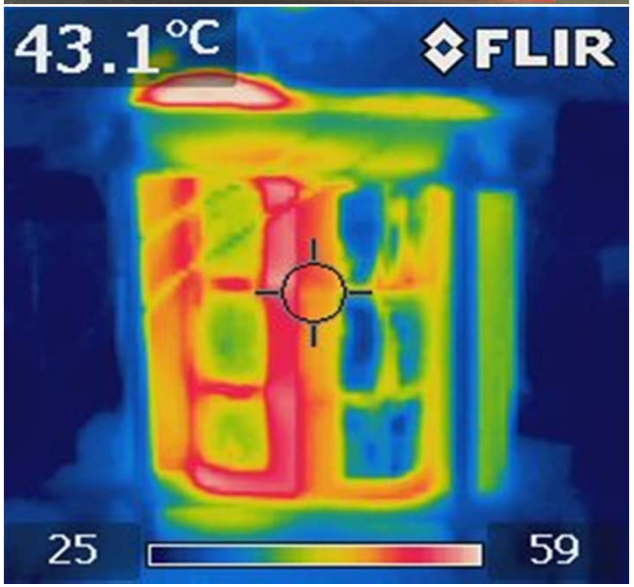

Test Waveforms

	3.9KW	7.0KW
CORE LOSS (W)	80.6	80.6
HV WINDING LOSS (W)	16.4	62.1
WINDING LOSS (W)	28.7	85.4
TOTAL (W)	126	228
EFFICIENCY	96.9%	96.8%

Insulation Capability

VOLTAGE (KV)	LEAKAGE CURRENT (nA)
10	3.6
15	5.8
20	10.5
25	16

TIPS: HV, High Frequency Transformer

1MVA 20kHz-50kHz Transformer Size

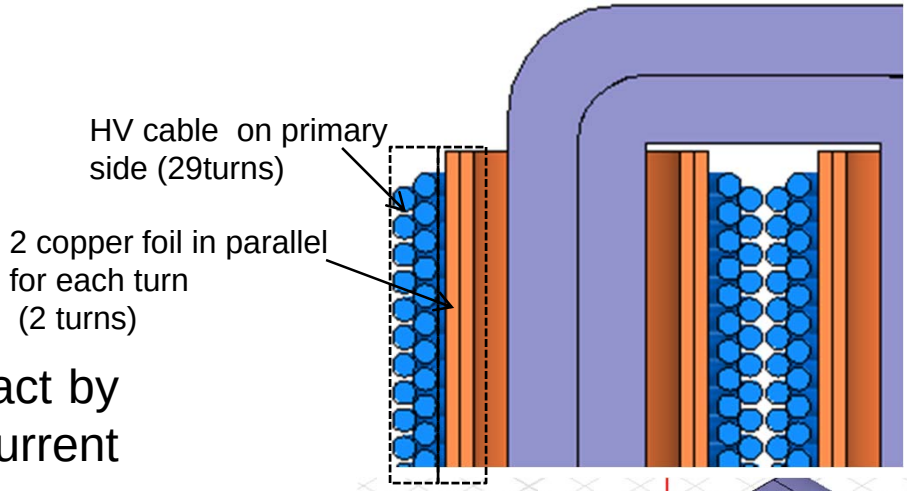

The size of transformer can be compact by customizing HV cable for proper current rating.

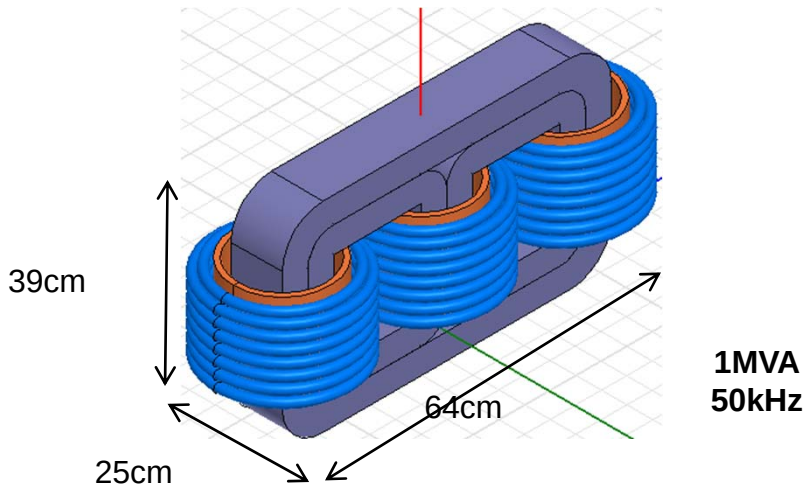

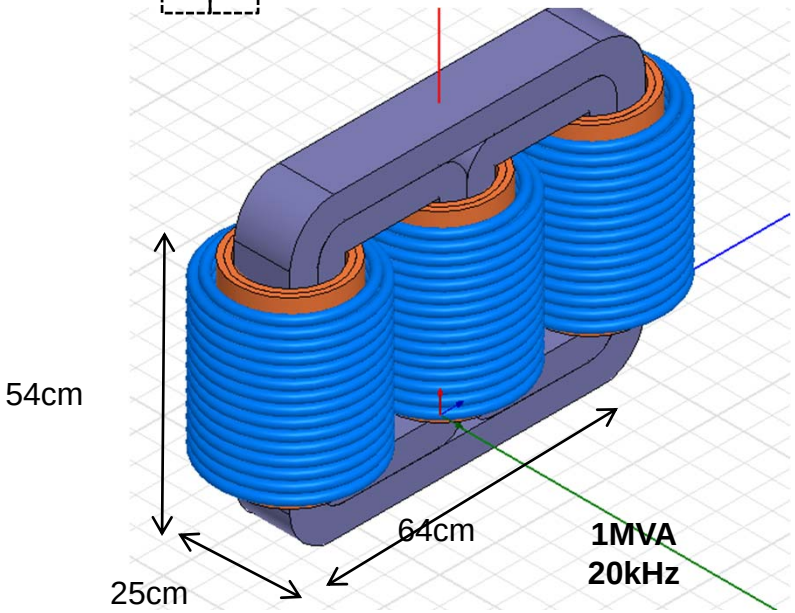

TIPS: HV, High Frequency Transformer Winding

Nanocrystalline cut E-cores

Material data, magnetic properties	VITROPERM 500 Z#
Material base	nanocrystalline Fe-based
Saturation flux density (25°C), B_s	1.2 T
Bipolar flux density swing (25°C), $\Delta B_{ss,\ 25°C}$	2.35 T
Bipolar flux density swing (90°C) , $\Delta B_{ss,\ 90°C}$	2.15 T
Squareness, B_r / B_s (typical value)	> 94%
Core losses P_{Fe} (typ. value at f = 50 kHz, ΔB = 0.8 T)	100 W/kg
Static coercivity H_c	< 10 mA/cm
Saturation magnetostriction (25°C)	< 0.5 x 10^{-6}
Curie temperature, T_c	> 600°C
Continuous upper operation temperature	120°C
Specific electrical resistivity	1.20 µΩm
Density	7.35 g/cm^3

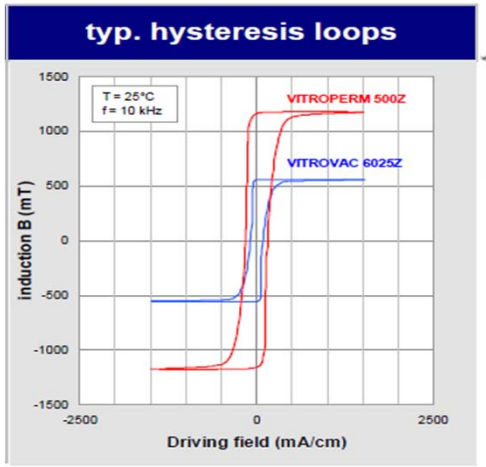

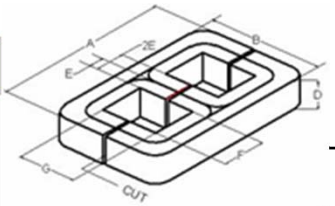

25kV Shielded Power Cable on primary side

A Uncoated, Okopact (Compact Stranded) Copper Conductor

B Strand Screen -Extruded Semiconducting EPR

C Insulation-Okoguard EPR

D Insulation Screen - Extruded Semiconducting EPR

E Shield-Copper Tape

F Jacket-Okoseal

Insulation
Okoguard is Okonite's registered trade name for its exclusive ethylene propylene rubber (EPR) based, thermosetting compound, whose optimum balance of electrical and physical properties is unequaled in other solid dielectrics. Okoguard insulation, with the distinctive red color and a totally integrated EPR system, provides the optimum balance of electrical and physical properties for long, problem free service. The triple tandem extrusion of the screens with the insulation provides optimum electrical characteristics.

1-Catalog Number
2-Conductor Size AWG or kcmil
3-Conductor Size -mm^2
4-Approx. Dia. over Insulation (in.)
5-Approx. Dia. over Screen (in.)
6-Jacket Thickness - mils
7-Jacket Thickness - mm
8-Approx. O.D. - Inches
9-Approx. O.D. - mm
10-Approx. Net Weight lbs./1000□
11-Approx. Ship Weight lbs./1000□
12-Ampacities (1) Conduit in Air
13-Ampacities (2) Direct Burial
14-Ampacities (3) Underground Duct
15-Conduit Size Inches (4)*

1	2	3	4	5	6	7	8	9	10	11	12	13	14	15
Okoguard Insulation: 175 mils (4.45mm), 100% Insulation Level														
135-23-3011	2	33.6	0.68	0.75	80	2.03	0.93	23.7	465	525	130	175	130	3

TIPS System: SiC 10kV MOSFET based 1MVA Converter at 5kHz switching

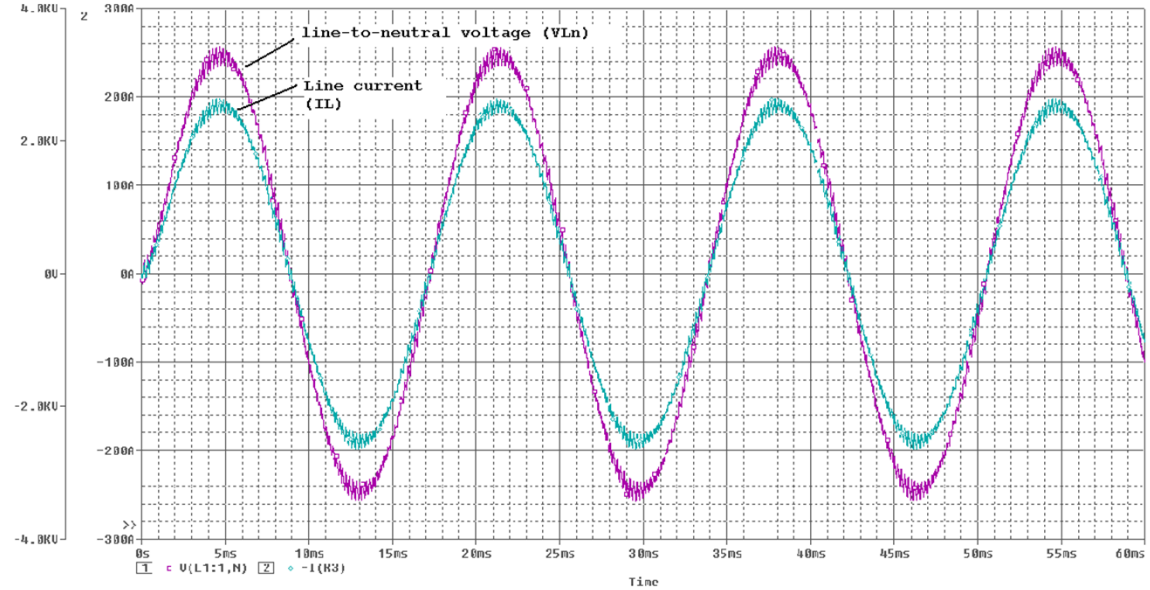

Output phase A line-to-neutral voltage versus current of the inverter (sw freq= 5kHz)

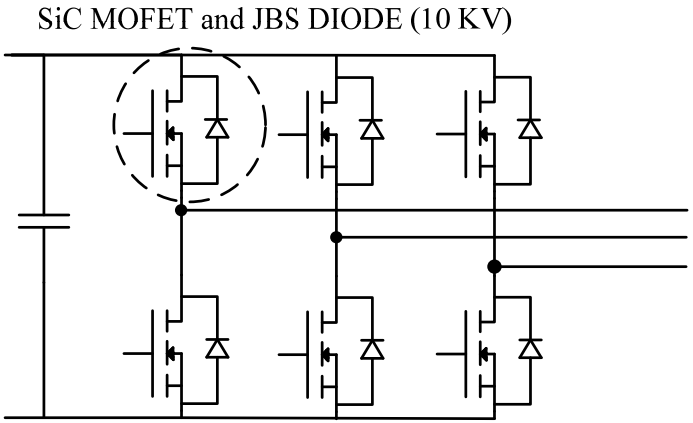

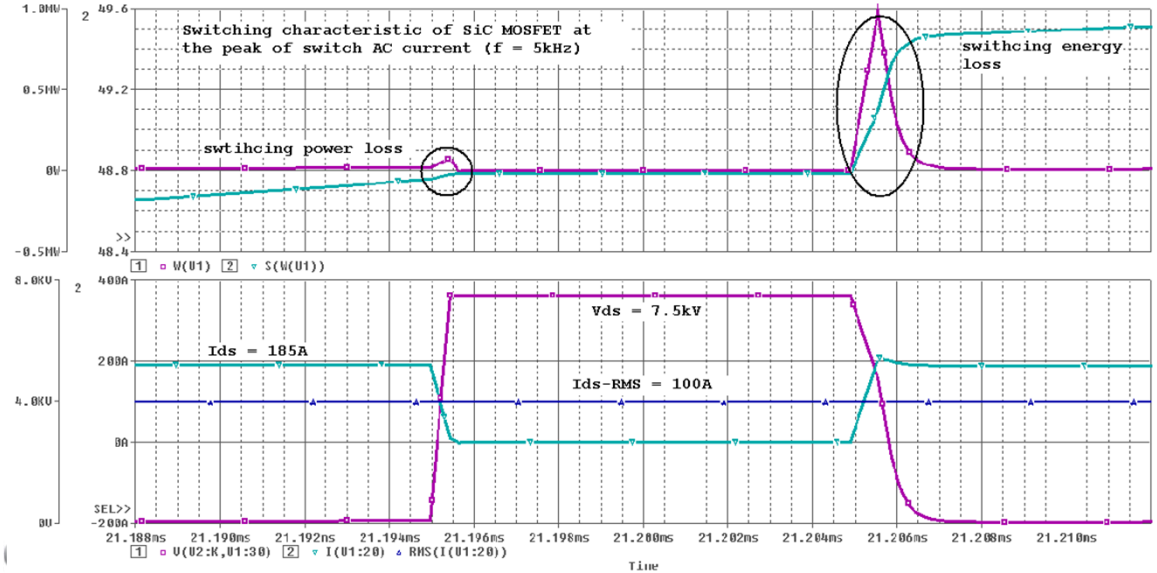

Switching transients of 10kV, 100A MOSFET at the peak of drain-to-source current through the switch (sw freq = 5kHz) Vdc=7.5kV

TIPS System : Switch Modeling 6.5kV Si-IGBT and Si-Diode

Switching waveforms of 6.5kV 100A Si-IGBT and 6.5kV Si-DIODE under 100A inductively clamped load

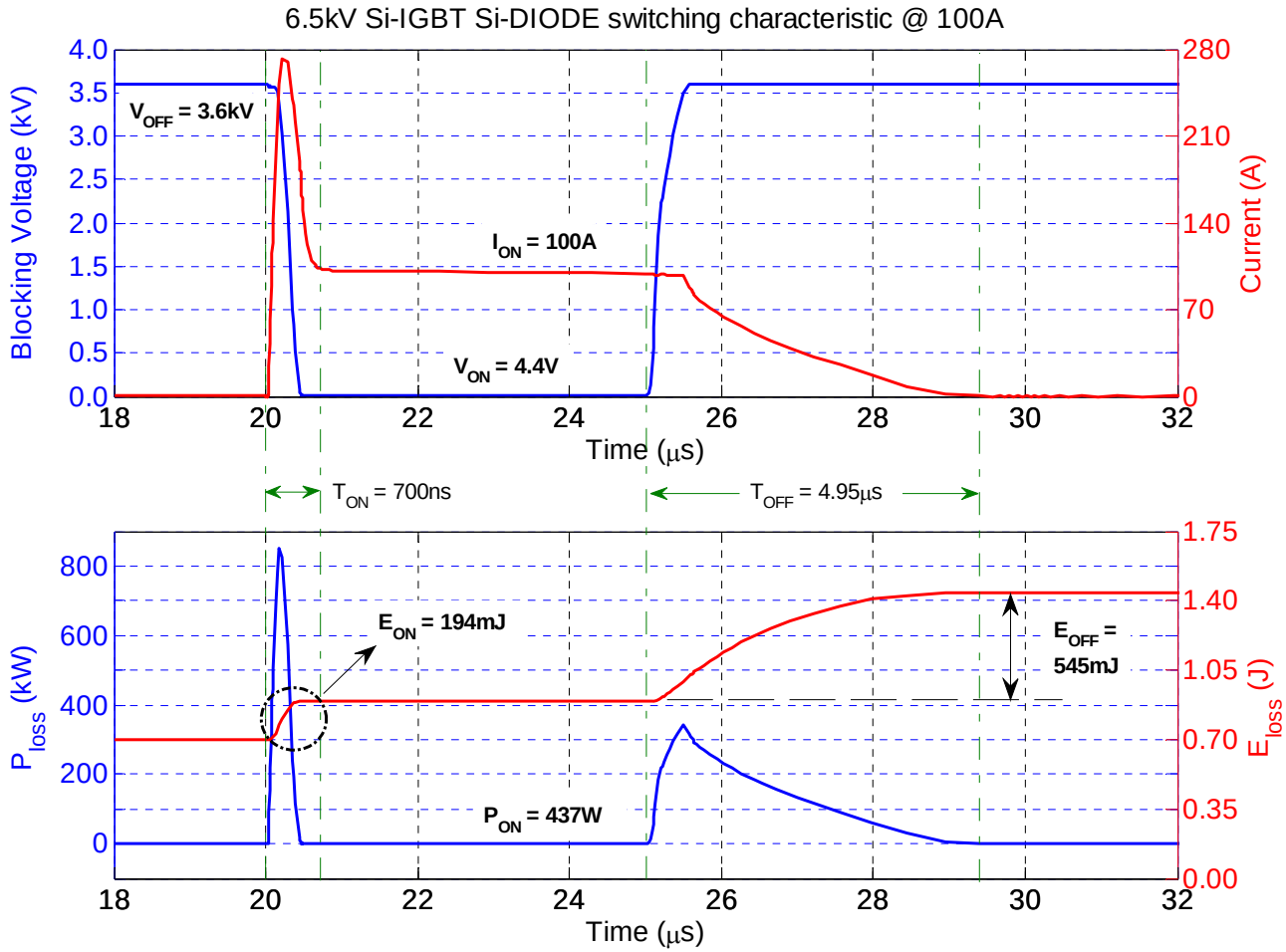

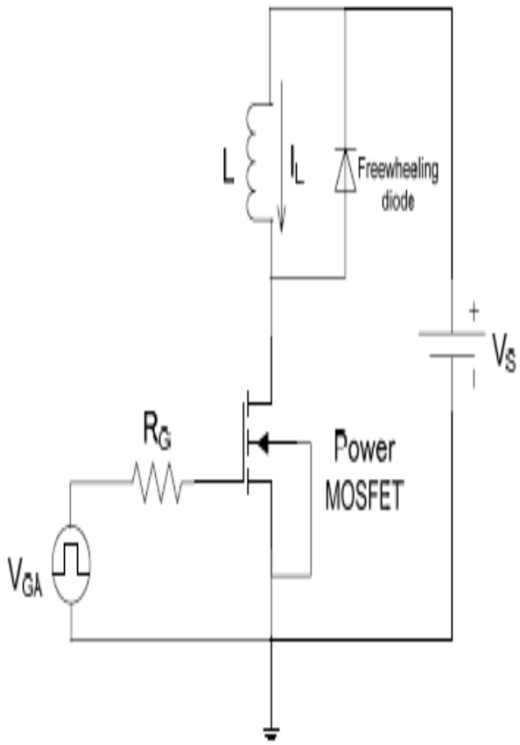

TIPS System : Switch Modeling
6.5kV Si-IGBT and SiC- JBS Diode

Switching waveforms of 6.5kV 100A Si-IGBT and SiC-JBS DIODE under 100A inductively clamped load

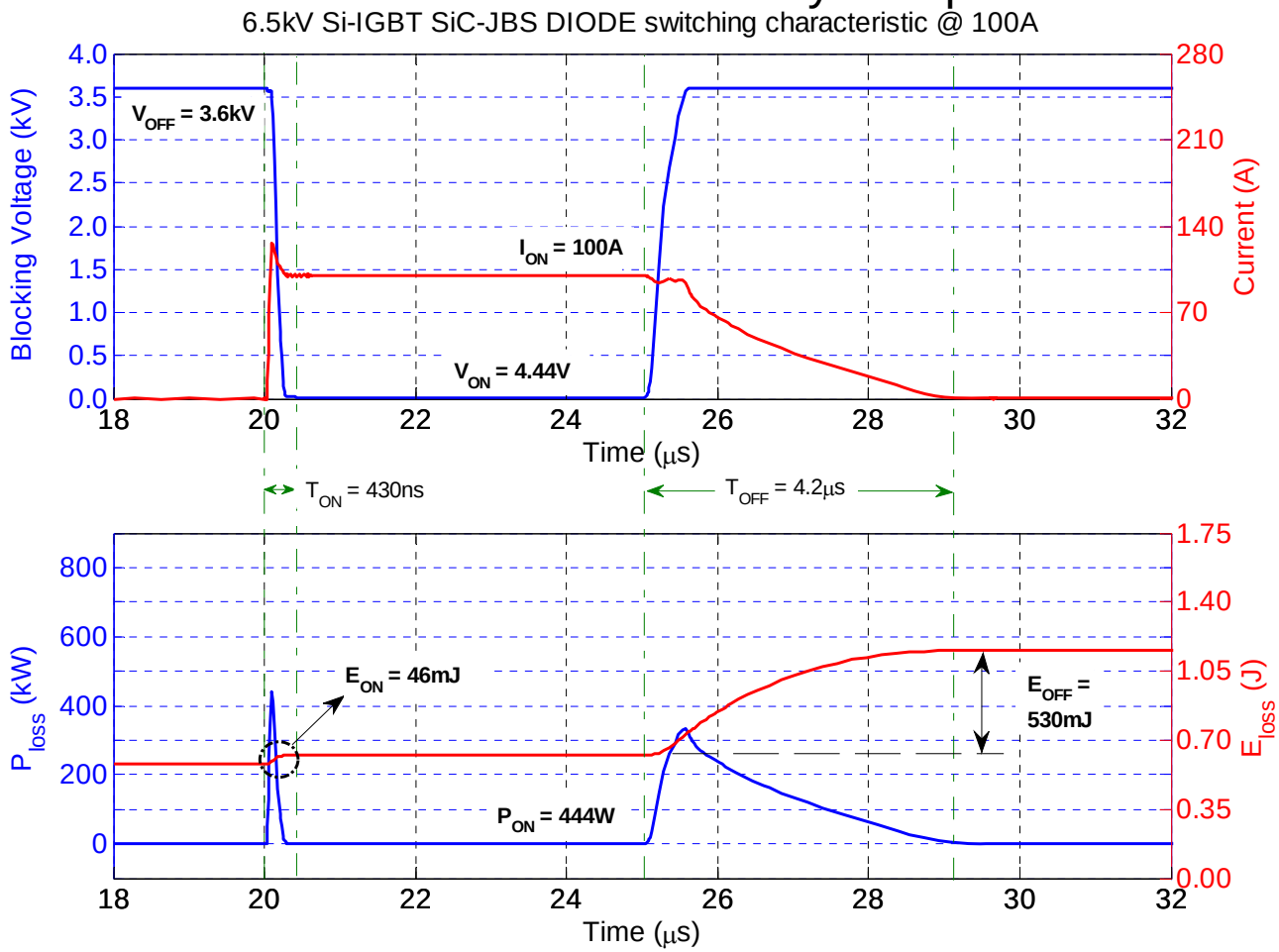

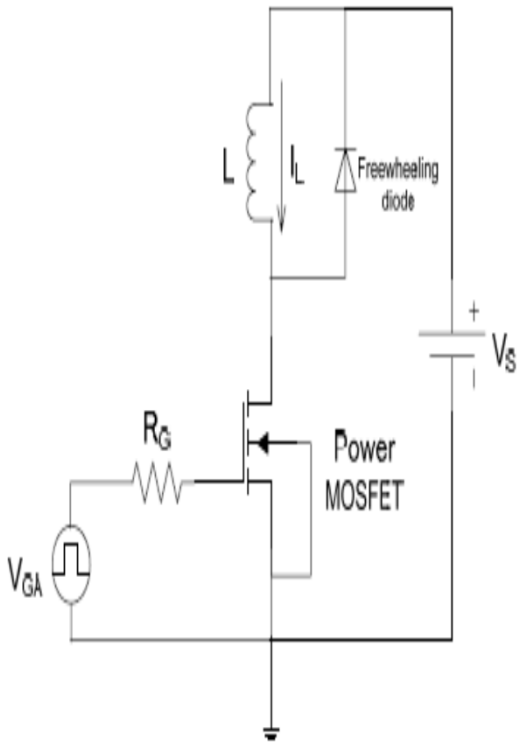

TIPS System : Switch Modeling

Switching waveforms of 10kV 100A SiC-MOSFET and SiC-JBS DIODE under 100A inductively clamped load

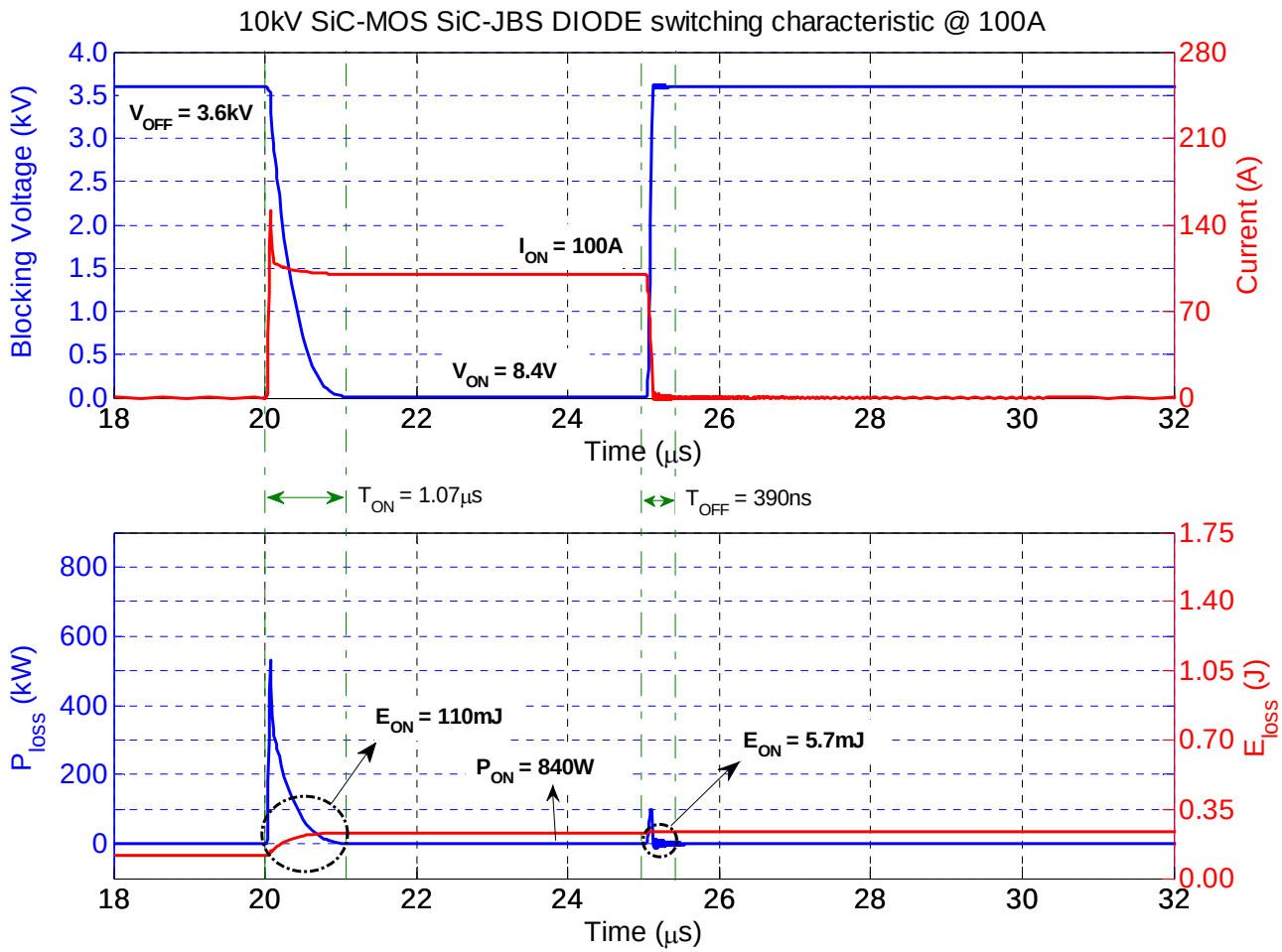

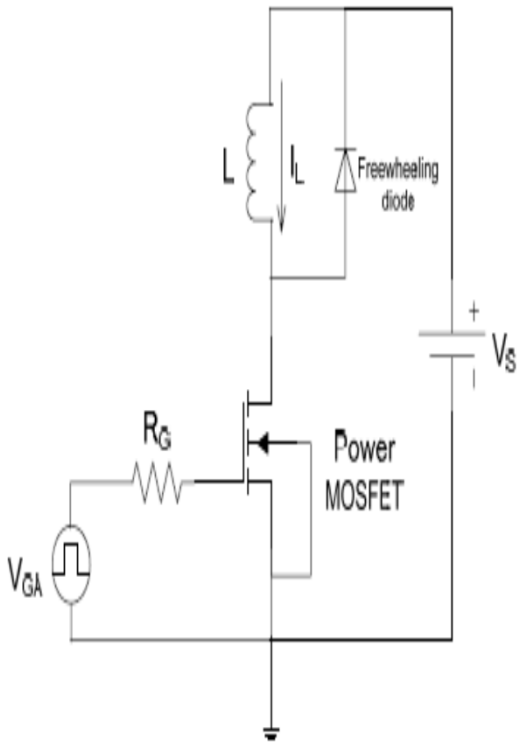

TIPS : Switch Modeling Comparison: 6.5kV IGBT, 10kV SiC MOSFET

$V_G = 15V$ $R_G = 750m\Omega$

$V_S = 3.6kV$ $I_L = 100A$

DEVICE	V_{ON}	switching times		Ploss			Eloss	
		T_{ON} (ns)	T_{OFF} (µs)	P_{ON} (kW)	P_{COND} (W)	P_{OFF} (kW)	E_{ON} (mJ)	E_{OFF} (mJ)
6.5kV10A Si-IGBT and DIODE	4.4	700	4.95	850	437	340	194	545
6.5kV10A Si-IGBT and SiC-JBS DIODE	4.44	430	4.2	440	444	333	46	530
10kV10A SiC-MOSFET and SiC-JBS DIODE	8.4	1070	0.39	526	840	98.7	110	5.7

arpa·e

CREE POWEREX NC STATE UNIVERSITY ABB
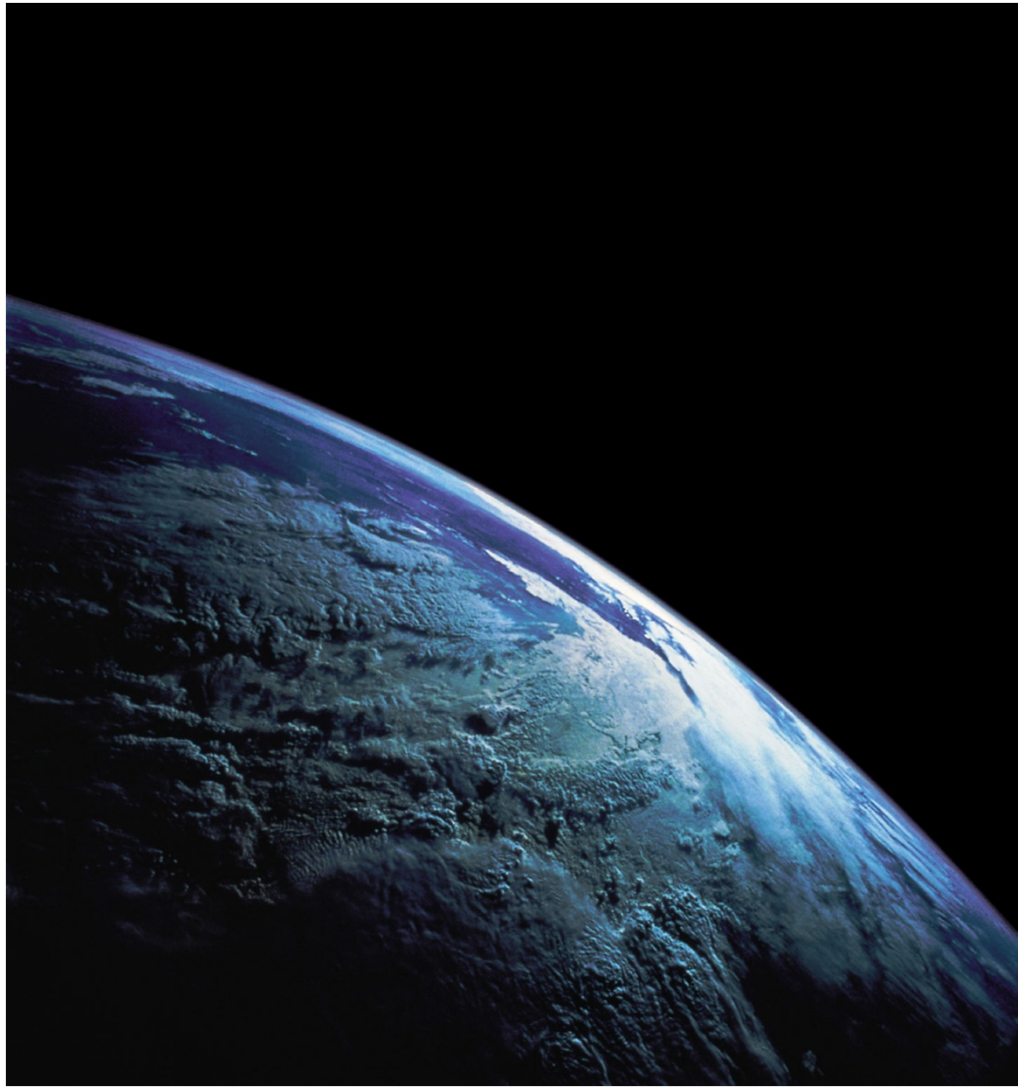
QUESTIONS?