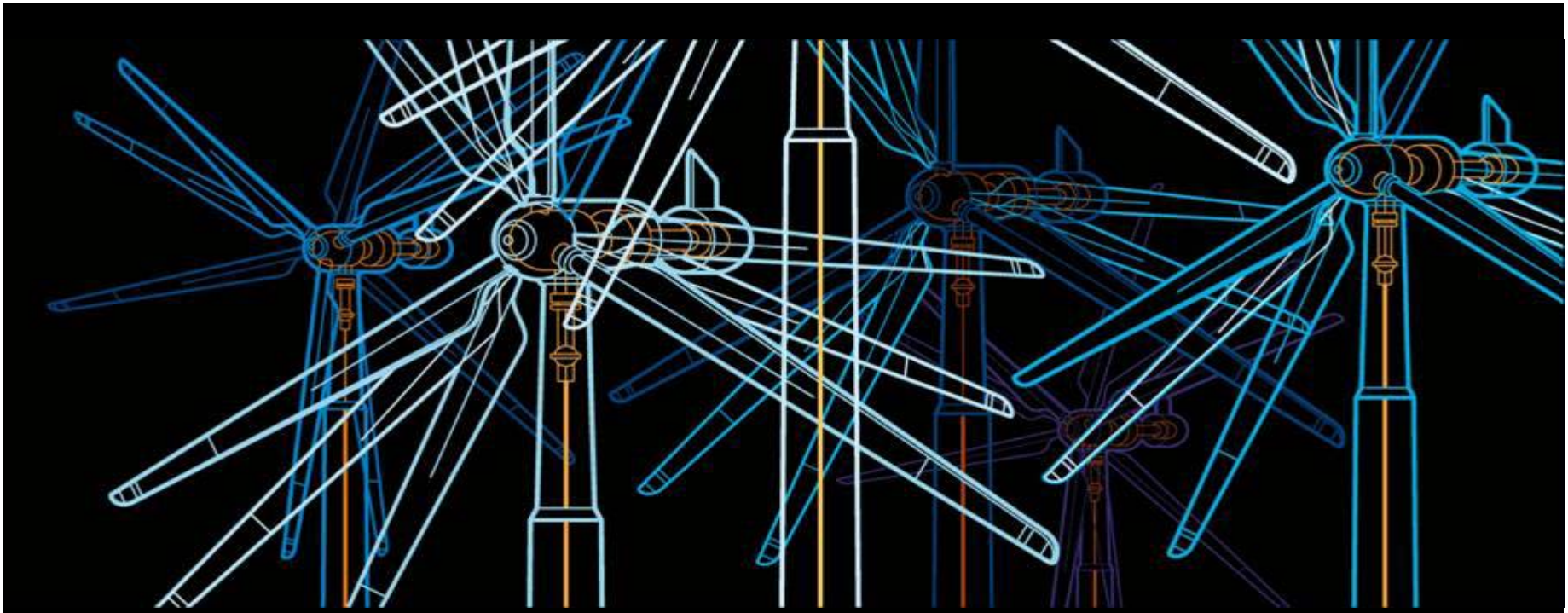

Le Tang, ABB Inc.

ARPA-E GENI Workshop, Arlington, VA, 2010-12-13

Future Transmission Grids, HVDC and FACTS - Systems Aspects

© ABB Group

Power and productivity
for a better world™

Outline

- AC Grid with embedded VSC-HVDC
- DC Grids and Multi-infeed HVDC
- FACTS for renewable integration
- Conversion from HVAC to HVDC

AC Grid with embedded VSC-HVDC

- VSC-HVDC provides necessary features for embedded applications in meshed, heavily loaded AC grids
  - Increase network transfer capability through effective congestion management
  - Provide dynamic voltage support to the surrounding AC networks
  - Improve the stability of transmission grid under severe disturbances via a range of advanced application control functions

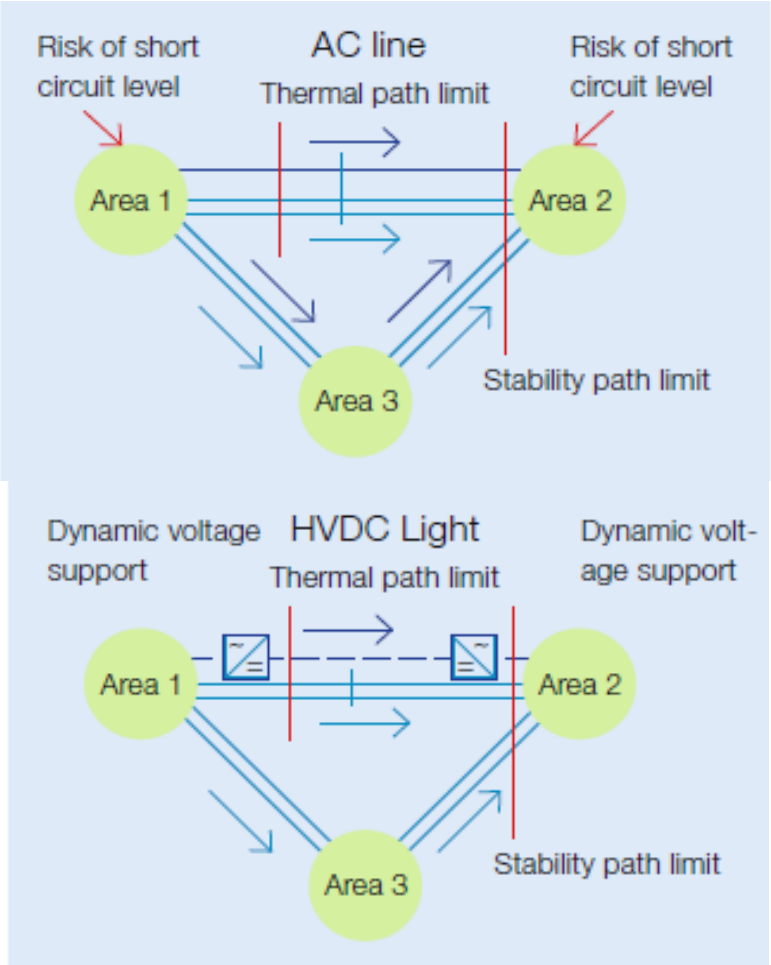

Embedding VSC-HVDC in AC networks opens up new possibilities to enhance smart transmission grid operation with improved reliability, delivery efficiency, and capacity utilization

Ability to Enhance AC Grid Rotor Angle Stability

- VSC-HVDC can limit rotor acceleration by
  - Fast power run-up or run-down control functions
  - Immediate power reversal if needed
- VSC-HVDC can improve dynamic stability considerably by
  - Modulating P and keeping a tight control over voltage
  - Modulating Q while maintaining scheduled P
- Combining with wide-area monitoring and control system (WAMS/WACS), VSC-HVDC can enhance system wide stability over a large geographical area

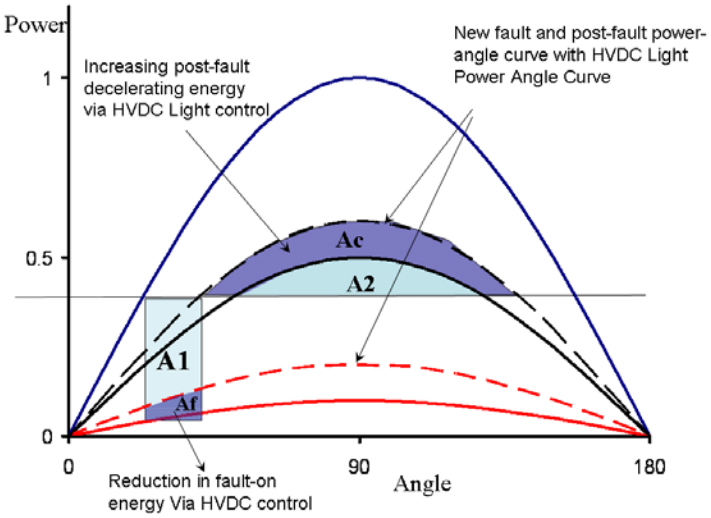

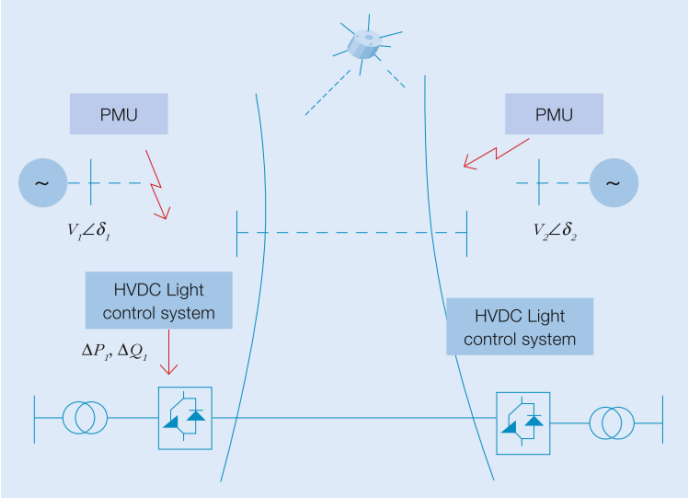

Inter-area Oscillations Damping by Power Modulation

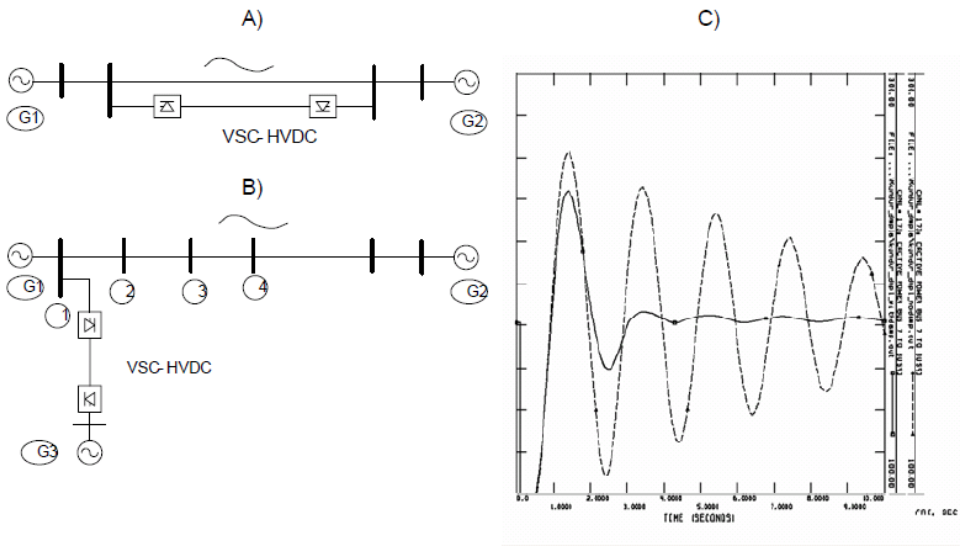

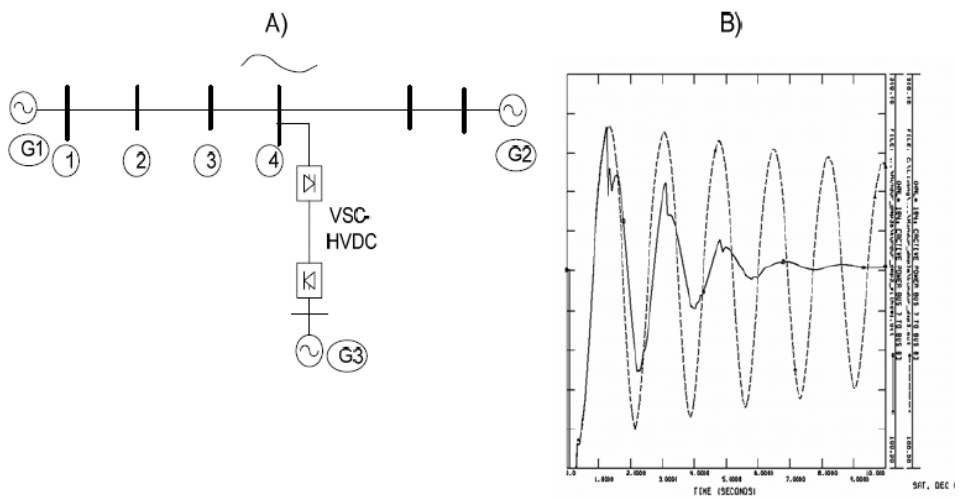

- VSC-HVDC can provide damping effect on inter-area oscillation by implementing an **active power** damping controller.
- VSC-HVDC can also provide damping effect on inter-area oscillation by implementing an **reactive power** damping controller.
- Control strategy and effects are dependent on system configurations and the location of VSC-HVDC converters

© ABB Group

Ability to Enhance AC Grid Voltage Stability

- Transmission systems with large amount of induction motor load are prone to fast voltage collapse following a fault
- VSC-HVDC enhances voltage stability by operating the converters as SVC or STATCOM during and after the fault
- This is particularly important for wind parks, where the variation in wind speed can cause severe voltage fluctuations
- VSC-HVDC increases fault ride through capability of wind farms by fast reactive power support during the fault at the point of common coupling

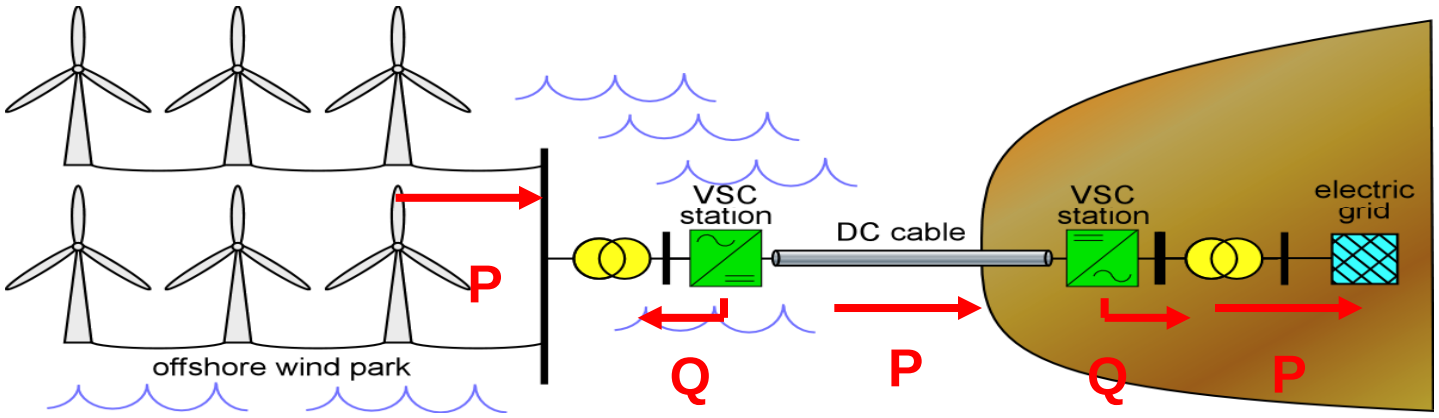

© ABB Group

Direct DC City Infeed

- City power grids are characterized by high load densities, strict requirements for reliability and excessive reliance on power import
- Existing transmission lines are close to thermal capacity limits and the system is close to operation stability limits
- It is a challenge to increase power delivery with AC expansion options due to the risk of increased short circuit levels and parallel flow issues.
- Benefits of direct DC city infeed
  - Alternative DC infeed schemes
  - Converters installed in the existing S/S
  - Controllable MW injections
  - Dynamic voltage support for improved system stability and power quality

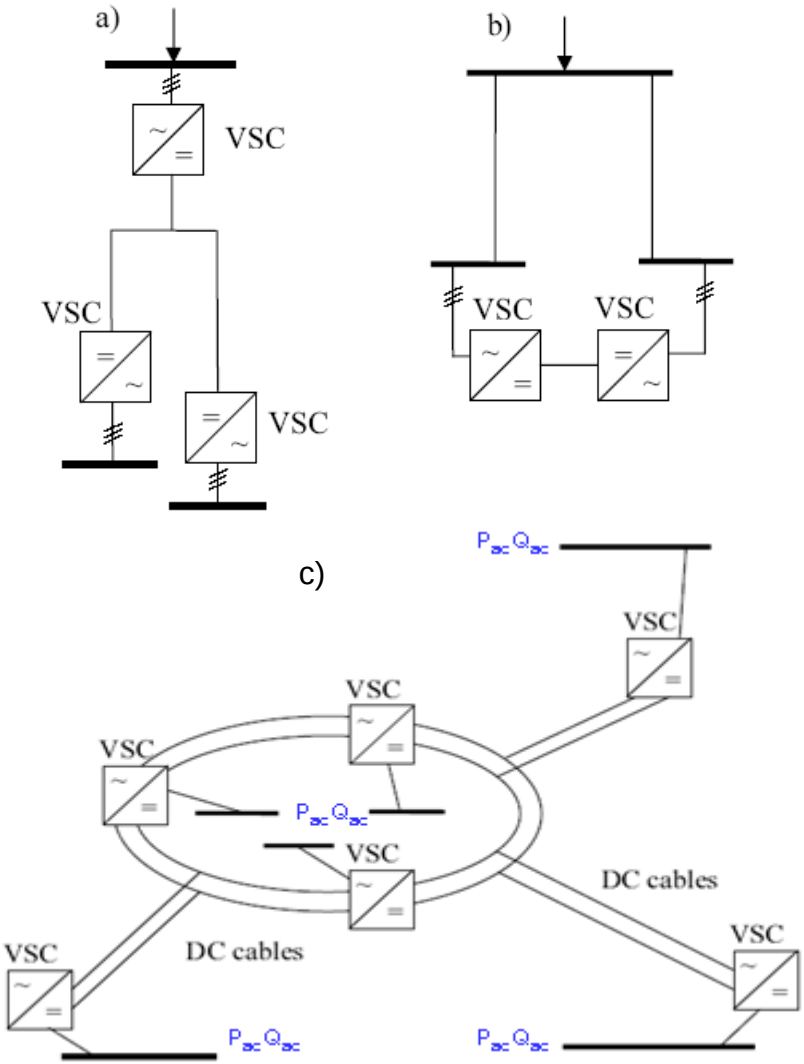

Outline

- AC Grid with embedded VSC-HVDC
- DC Grids and Multi-infeed HVDC
- FACTS for renewable integration
- Conversion from HVAC to HVDC

Why DC Grids?

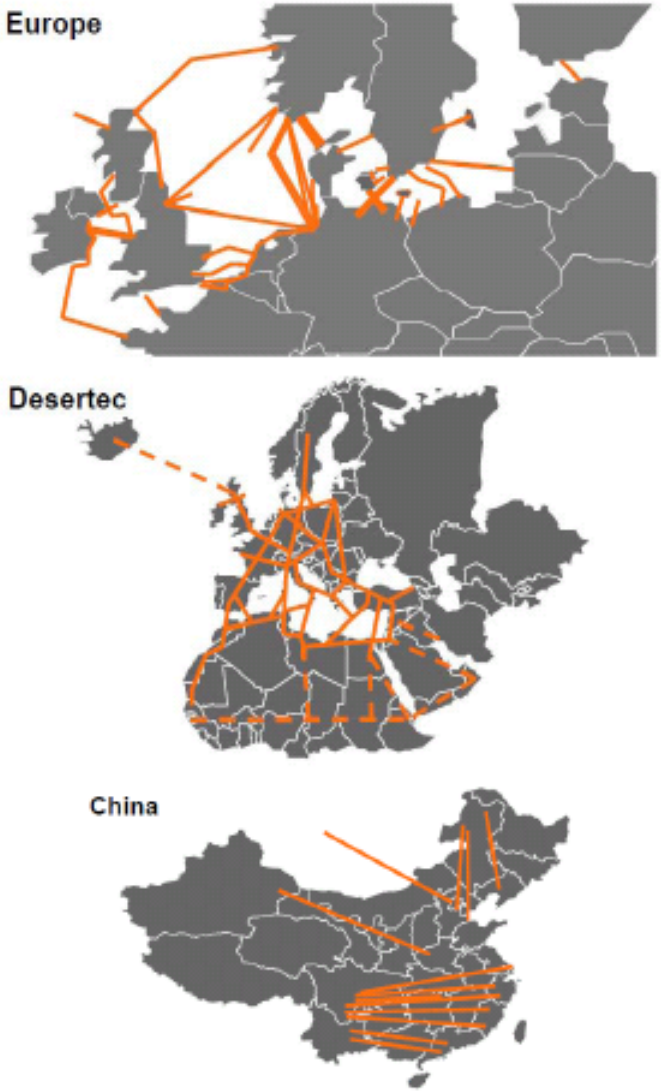

- Significant loss reduction
- Increased power capacity per line/cable vs. AC
- Stabilized AC & DC grid operation
- Less visual impact and lower electromagnetic fields
- Easier acceptance of new DC projects if lines can be tapped
- DC = only solution for subsea connections > 60 km
- Connection of asynchronous AC Networks
- Circumvent right of way limitations

Technology required for visions like Desertec & North Sea Offshore Grid

What is a DC grid?

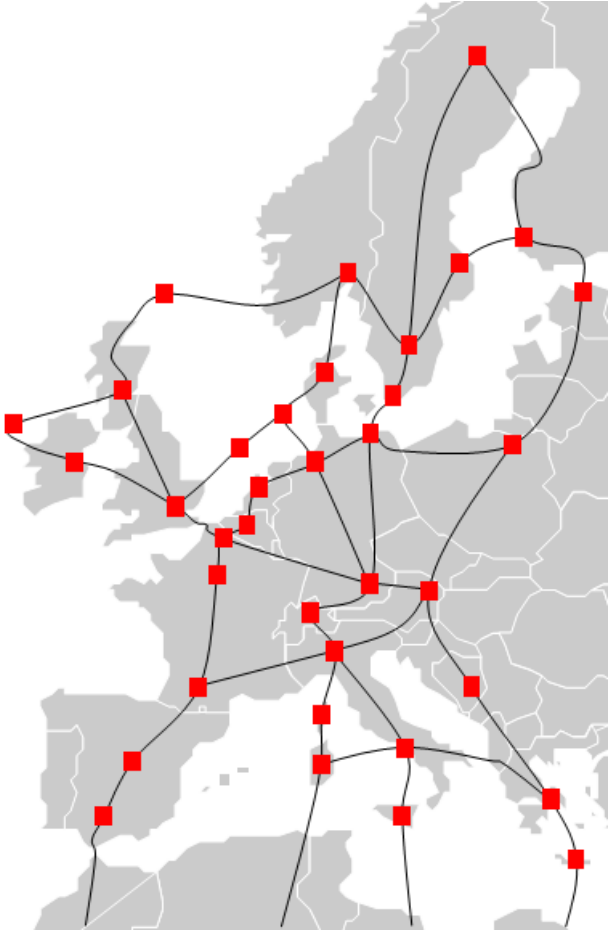

- A DC electricity grid that can operate:
  - Independent of one or several disturbances (isolate a failure)
  - In different operation modes in the connected AC- & DC-systems
- Technology gaps for the full realization include:
  - DC breaker
  - Power flow control
  - Automatic network restoration
  - High voltage DC/DC converters
- Global rules/regulations for operation required for market acceptance

Examples of Installed HVDC Breaker Technologies

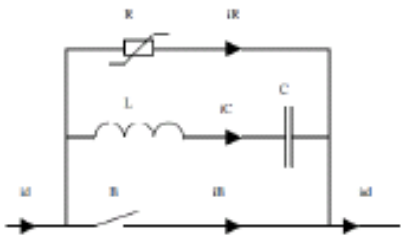

- Passive Resonance Breaker
  - Arc negative resistance causes current oscillations over the capacitor, resulting in current zero crossings
  - Classic HVDC dc-neutral switchyards
  - Speed and voltage rating to be improved for grid applications

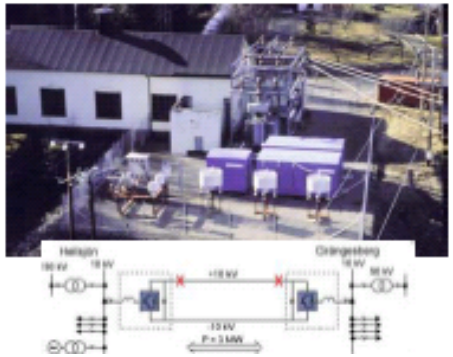

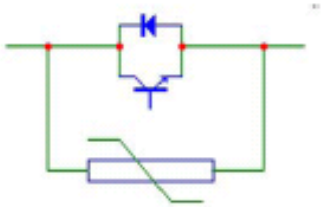

- Semiconductor Breaker
  - Very fast interruption < 1ms
  - On-state losses a drawback
  - 10 kV pilot in Hällsjön, Sweden

DC Grid visions

Required additional R&D

Regional DC grids with one protection zone can be built today

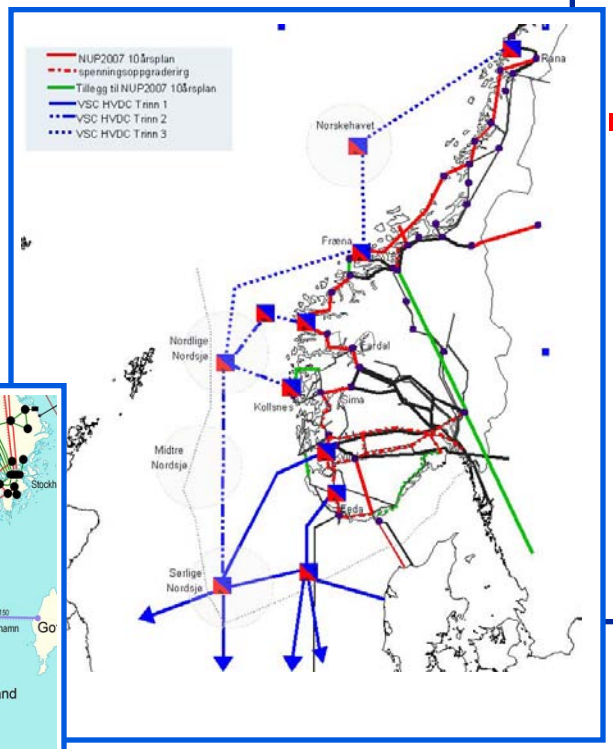

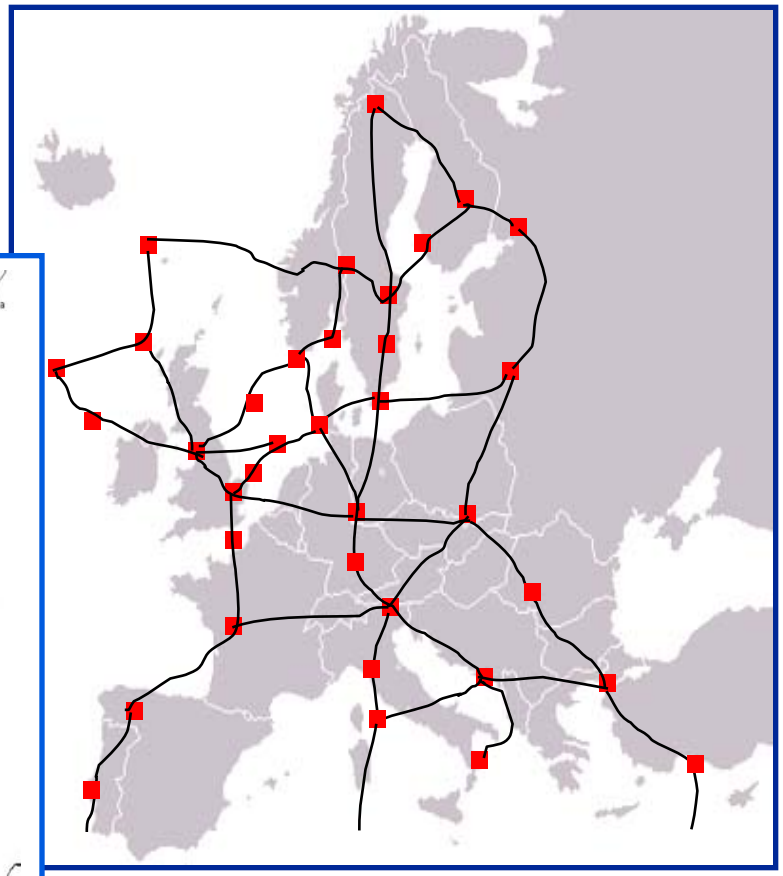

Time to market

Interregional DC grids will be built in the near future. Technology gaps are worked on.

Multi-infeed HVDC systems

- Classic HVDC systems with multiple inverters connected to AC buses that are electrically close
- Serious concerns for mutual interaction following a disturbance
- Potential problems include:
  - Small signal instability due to control interactions among HVDC links
  - Voltage instability and collapse
  - Increased commutation failures in one HVDC link due to ac faults occurring in the vicinity of a neighboring one
  - Transient ac voltage depression due to simultaneous recovery of constituent HVDC links after ac faults
- Mitigation measures:
  - Local generation
  - Reactive power compensation
  - Advanced HVDC system controls

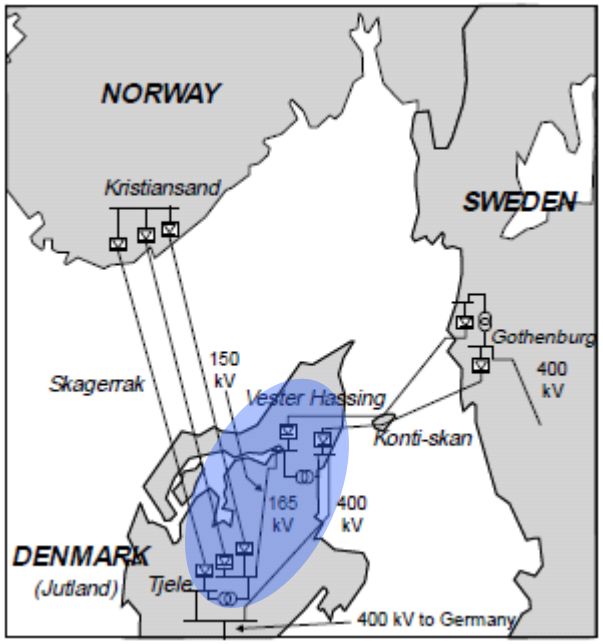

Skagerrak/Konti Skan five-infeed HVDC system

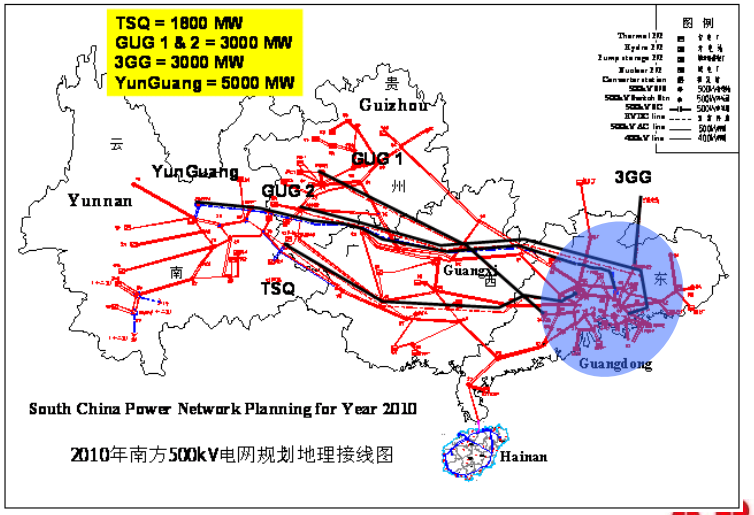

China South Grid five-infeed HVDC system

Outline

- AC Grid with embedded VSC-HVDC
- DC Grids and Multi-infeed HVDC
- FACTS for renewable integration
- Conversion from HVAC to HVDC

DynaPeaQ - ABB SVC Light® with Energy Storage

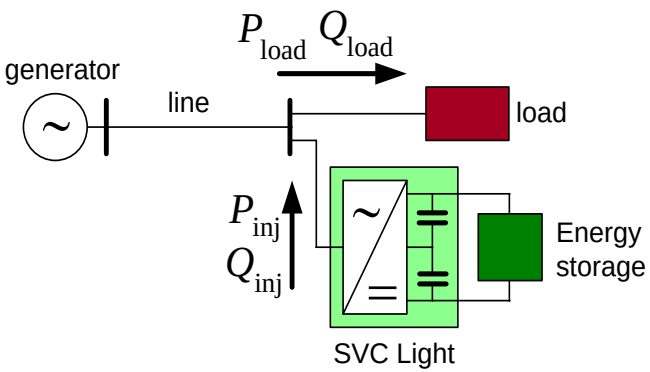

Typical layout for 20 MW during 15 min, ±30 Mvar continuously

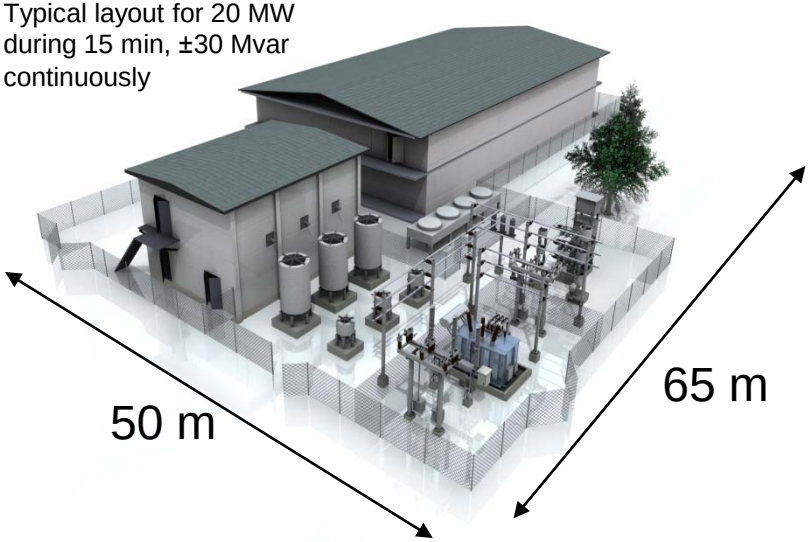

- VSC-based fast dynamic voltage support with energy storage
- Storage size depending on power level and discharge time
- Focus on "**dynamic**" properties:
  - Large number of charge and discharge cycles
  - High power during relatively long discharge time
  - Supervision and control functions at different levels
- ABB has selected a high performance Li-ion battery as storage

Grid Applications for DynaPeaQ

- Grid connection of renewable generation - supports the wind farm integration in the following aspects:
  - steep power changes
  - voltage control
  - grid stability during and after faults
  - frequency regulations
- Smart Grid applications
  - Integration of electric vehicles
  - Peak-load shaving
  - Ancillary services
- Backup power
  - Supports reactive power continuously
  - Provides active power in case of generation loss

© ABB Group

Voltage Recovery Improvement with STATCOM+ES

Voltage Recovery

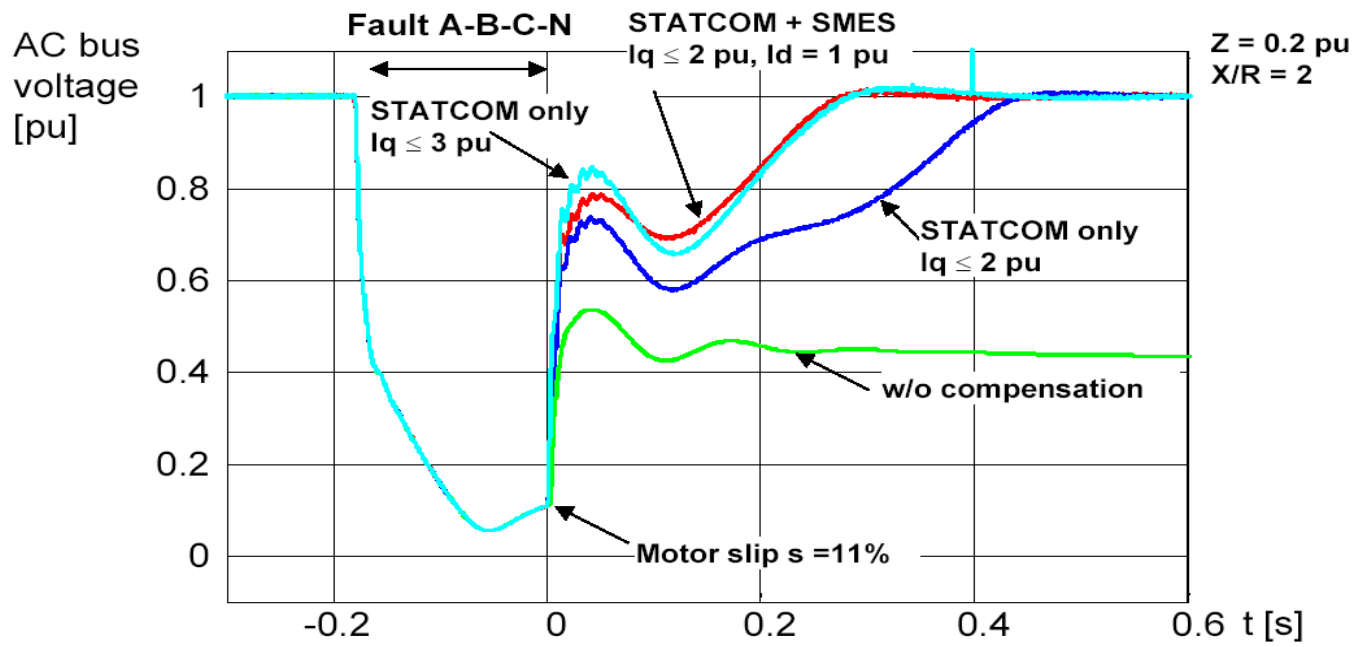

© ABB Group

Transmission for Integrating Competitive Renewable Energy Zones (CREZ)

- CREZ selected by PUCT
  - Transmission plan ordered by PUCT
  - Integration of 11,553 MW wind generation
  - 2,300 miles of new 345kV ROW
  - Nine circuits designed with 50% series compensation
  - “Place holder” shunt compensation
- Sub-synchronous concerns
  - SSI (wind generators and series capacitors)
  - SSR (thermal generators and series capacitors)
  - SSTI (thermal generators and dynamic shunt VAR sources)
- Mitigation measures are to be further investigated

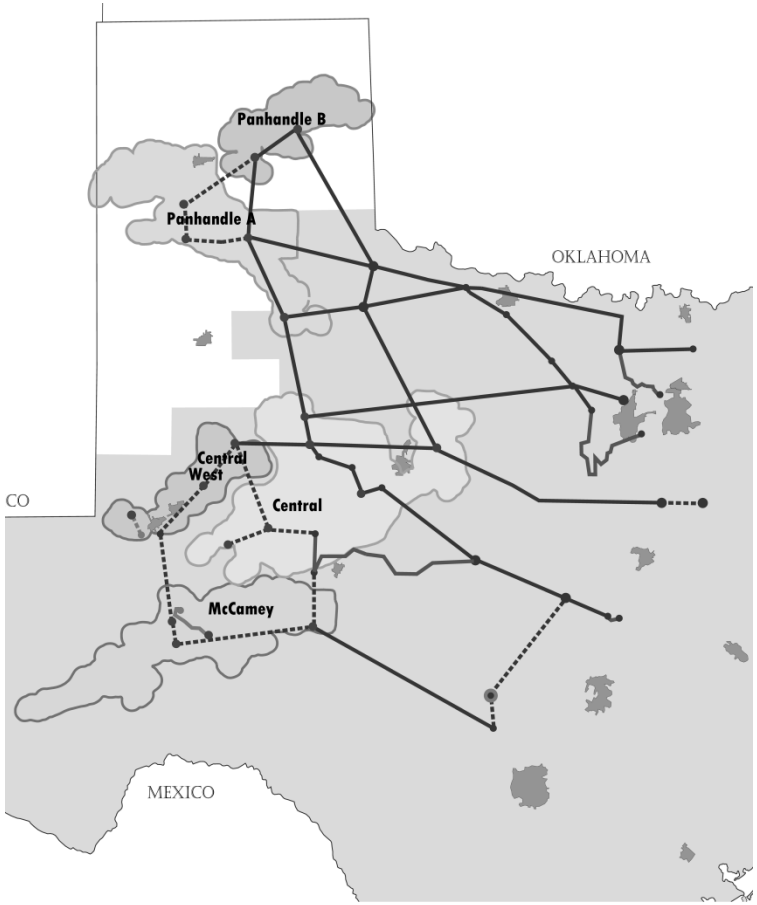

Texas CREZ and Transmission Plan

Outline

- AC Grid with embedded VSC-HVDC
- DC Grids and Multi-infeed HVDC systems
- FACTS for renewable integration
- Conversion from HVAC to HVDC

HVAC to HVDC OH Line Conversion

- Factors to Consider
  - Transmission Capacity
  - Environmental impact
  - HVDC Equipment footprint
  - System reliability

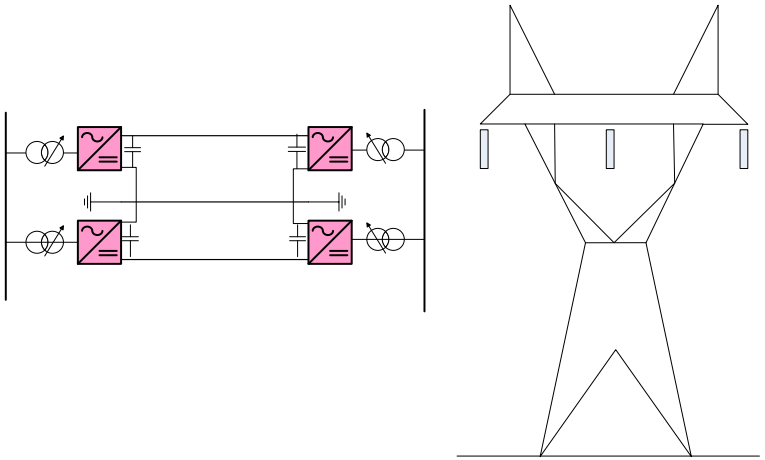

- Choice of DC Voltage based on
  - Electrical gradient at conductor surface (corona)
  - Insulation capability
  - Electric Field at Ground
  - Clearances

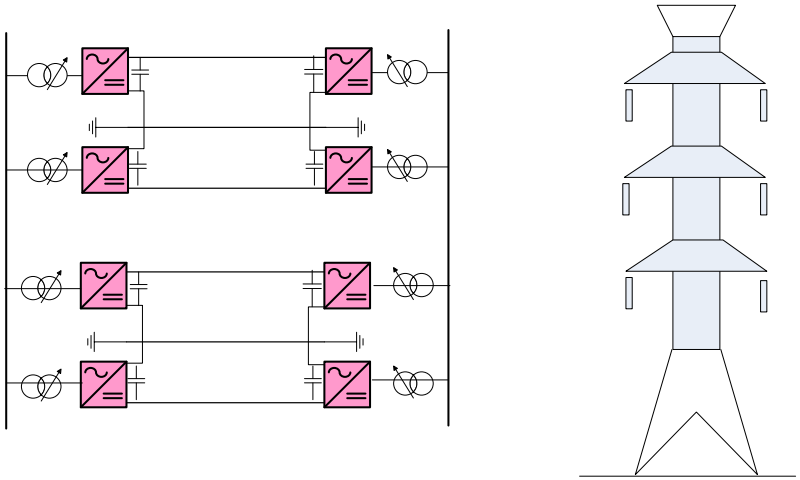

Captive Link, VSC-HVDC OH Transmission

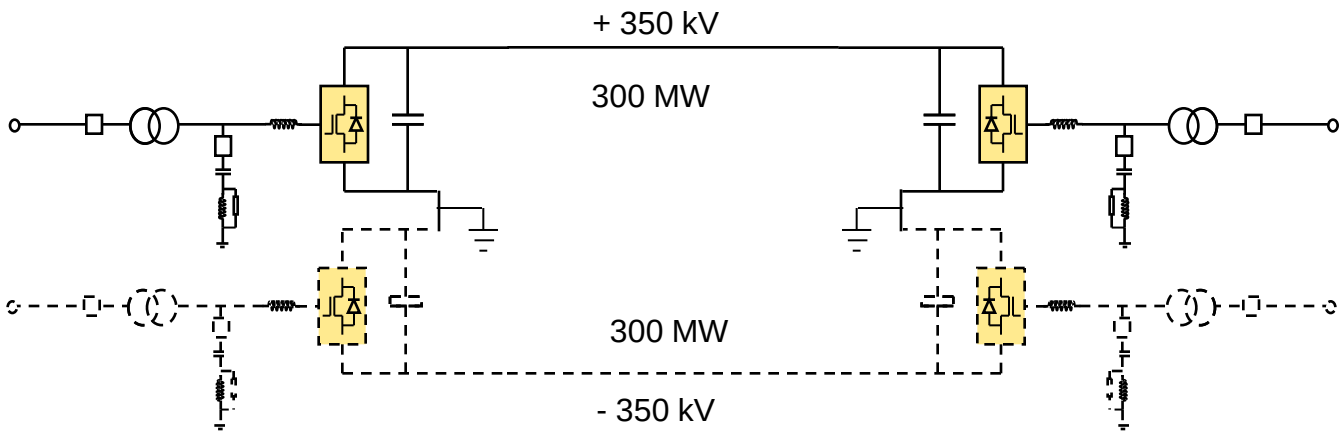

- 1st HVDC Light with OHL
  - 970 km, +/-350 kV
  - 50 km electrode lines (overhead)
- Re-start after DC-line faults due to lightning and bushfires within 500 ms after clearing including deionization time
- Stable and robust power transmission verified for low short-circuit power down to 300 MVA
- Black start of Caprivi AC system

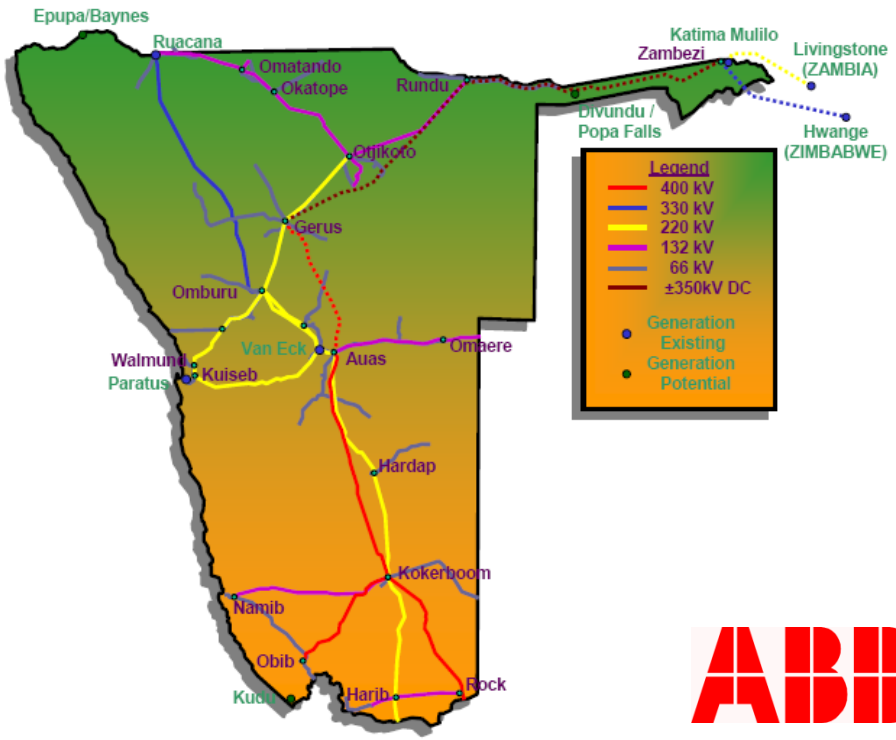

HVAC to HVDC Cable Conversion

- Converting mass-impregnated (PILC) ac cables – not practical
  - Environmental problems (oil and lead)
  - Aging issues - the cables are old, deteriorating, and have reliability problems. They are being actively replaced by utilities
  - Mainly used in integrated networks, not over long point-to-point HV transmission
- Converting Cross-linked polyethylene (XLPE) cables

Conclusions

- Power grid is experiencing increased needs for
  - Enhanced bulk power transmission
  - Reliable integration of large-scale renewables
  - Flexible power flow controllability
- Future transmission infrastructure development
  - Mixed AC/DC grid structure
  - HVDC Light® is now emerging as robust and economical alternative for transmission grid expansion
  - SVC Light® with Energy Storage offers superrior support to integration of renewrables and smart grid operation

HVDC and FACTS are essential technologies for future grid expansion and reliable integration of large-scale renewable energy sources

Power and productivity
for a better world™

ABB